PRODUCT SPECIFICATIONS

Mark Two (Gen 2)

Replace machined aluminum tooling—jigs, jaws, and fixtures—with stronger parts for a fraction of the price. The Mark Two combines our unique continuous carbon fiber reinforcement with workhorse reliability for versatile parts with 26x the strength of ABS, ready same-day for use straight off the printer.

Printer Properties	**Process**	Fused filament fabrication, Continuous Filament Fabrication
	Build Volume	320 x 132 x 154 mm (12.6 x 5.2 x 6 in)
	Weight	16 kg (35 lbs)
	Machine Footprint	584 x 330 x 355 mm (23 x 13 x 14 in)
	Print Bed	Kinematic coupling — flat to within 160 µm
	Extrusion System	Second-generation extruder, out-of-plastic detection
	Power	100–240 VAC, 150 W (2 A peak)
	RF Module	Operating Band 2.4 GHz Wi-Fi Standards 802.11 b/g/n
Materials	**Plastics Available**	Onyx, Nylon White, Precise PLA, Smooth TPU
	Fibers Available	Carbon Fiber, Fiberglass, Aramid Fiber (Kevlar®), HSHT Fiberglass
	Tensile Strength	800 MPa (25.8x ABS, 2.6x 6061-T6 Aluminum) *
	Tensile Modulus	60 GPa (26.9x ABS, 0.87x 6061-T6 Aluminum) *
Part Properties	**Layer Height**	100 µm default, 250 µm maximum
	Infill	Closed cell infill: multiple geometries available
Software	**Supplied Software**	Eiger Cloud (Other options available at cost)
	Security	Two-factor authentication, org admin access, single sign-on

FRONT VIEW

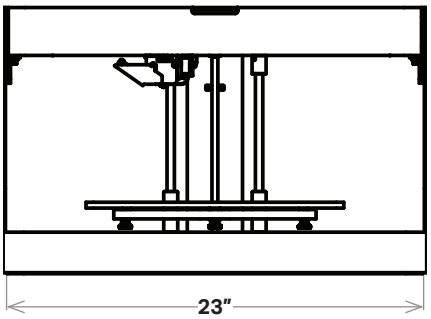

SIDE VIEW

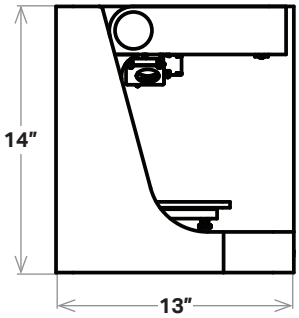

* Continuous carbon fiber data. **Note:** All specifications are approximate and subject to change without notice.
Dupont™ and Kevlar® are trademarks and registered trademarks of E.I. du Pont de Nemours and Company.